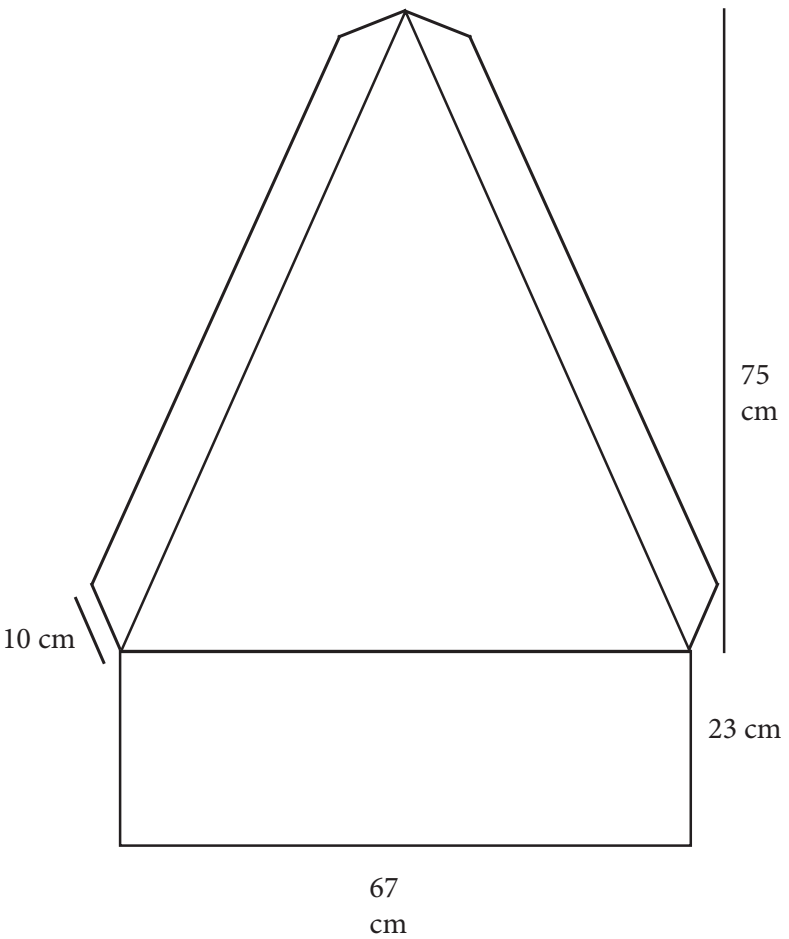
75
cm
10 cm
23 cm
67
cm

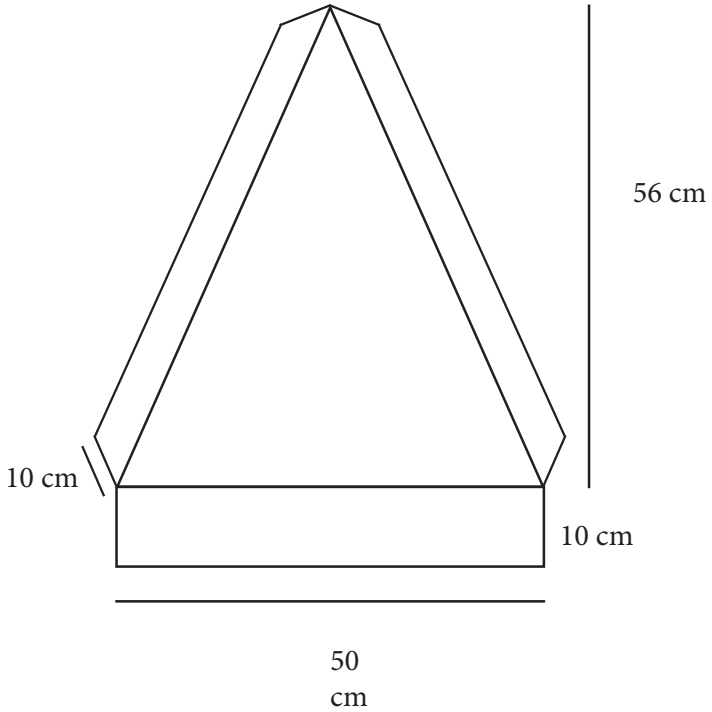
56 cm
10 cm
10 cm
50
cm

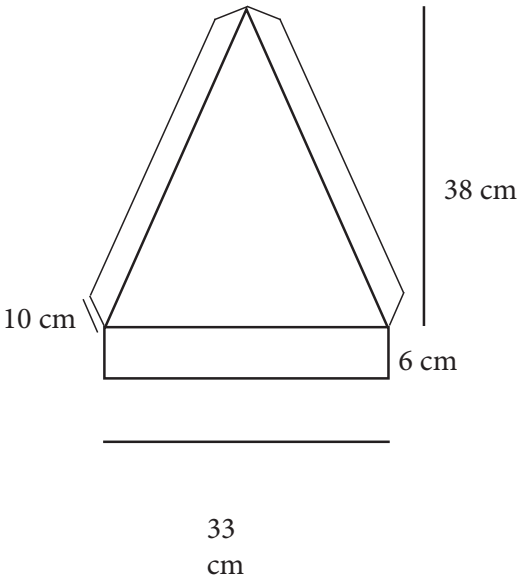
38 cm
10 cm
6 cm
33
cm